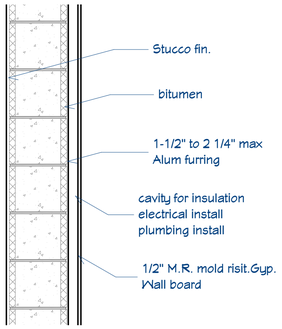

A Wall section (CMU)
Scale: 1" = 1'-0"
(exterior walls)

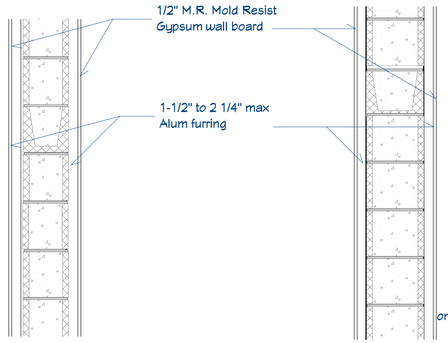

B Wall section (CMU)
Scale: 1" = 1'-0"
(interior walls)

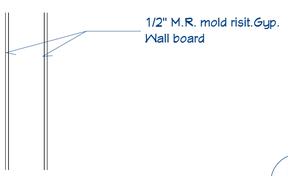

C Wall section CMU
Scale: 1" = 1'-0"
(interior walls)

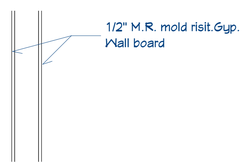

D Wall section 6" STUD
Scale: 1" = 1'-0"
(interior walls)

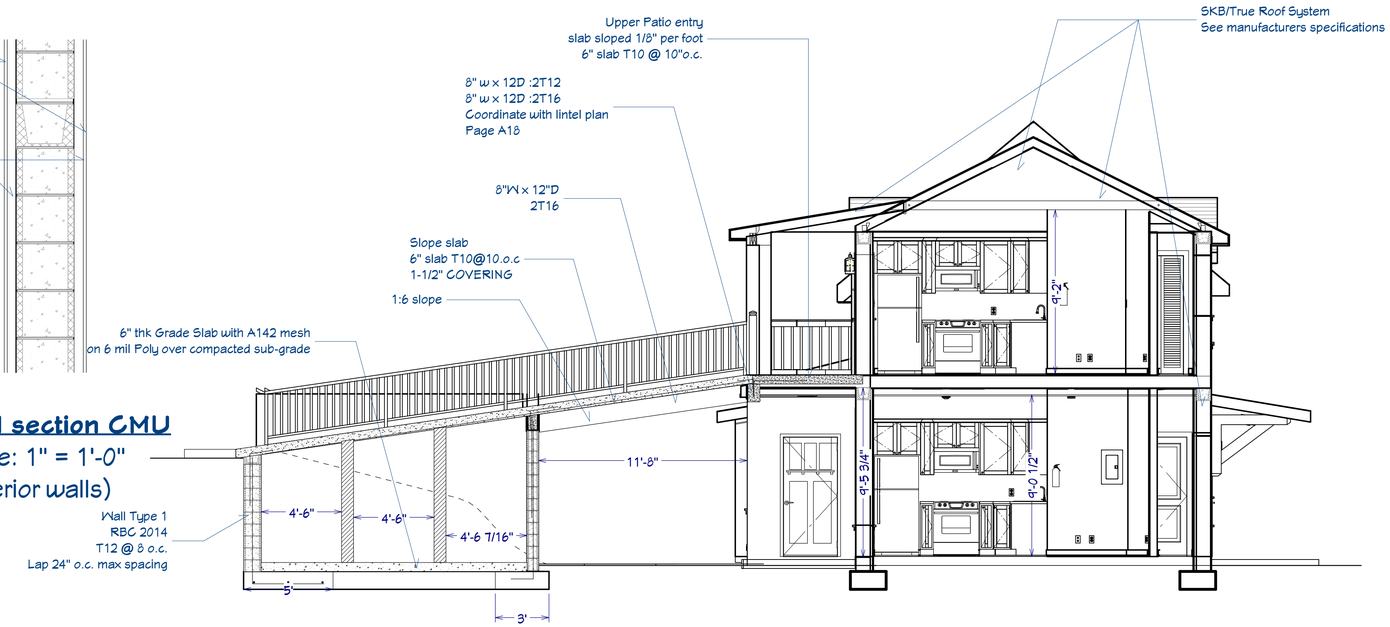

F Building Section (18 Battery Rd Ramp) Typ.
Scale: 1/4" = 1'-0"
see Pg A18 for lintel beams size at patios

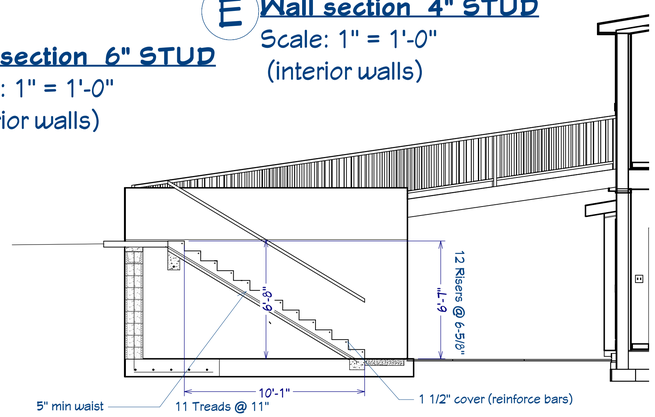

E Wall section 4" STUD
Scale: 1" = 1'-0"
(interior walls)

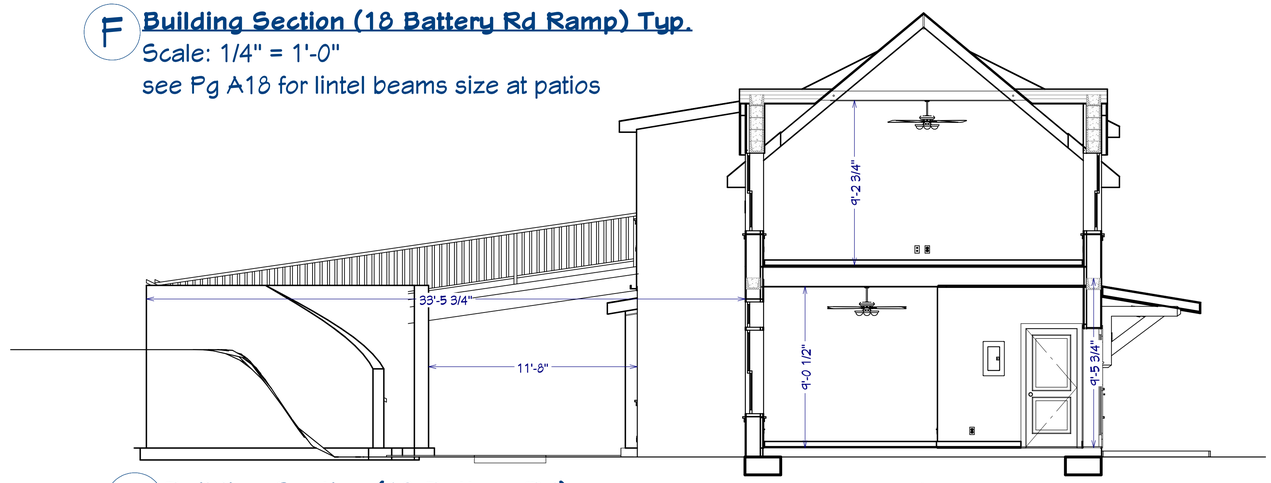

G Exterior CONC. Stair Section (18 Battery Rd)
Scale: 1/4" = 1'-0" *(Typical)*

H Building Section (18 Battery Rd)
Scale: 1/4" = 1'-0"

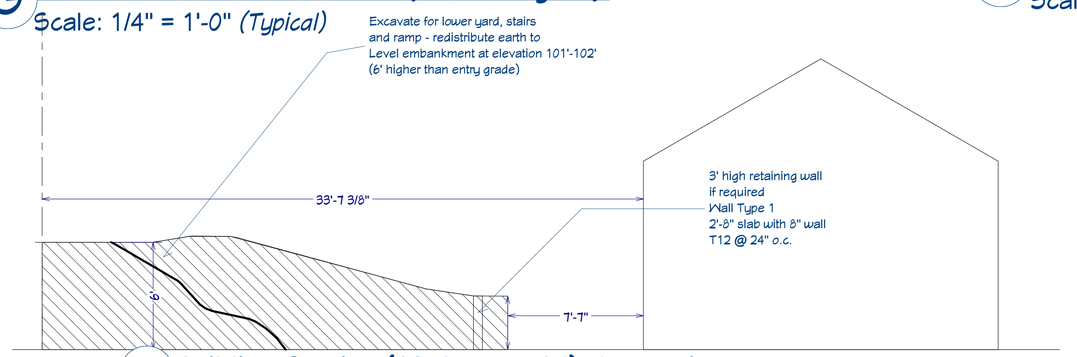

J Building Section (18 Battery Rd) Excavation and bank stabilization
Scale: 1/4" = 1'-0"

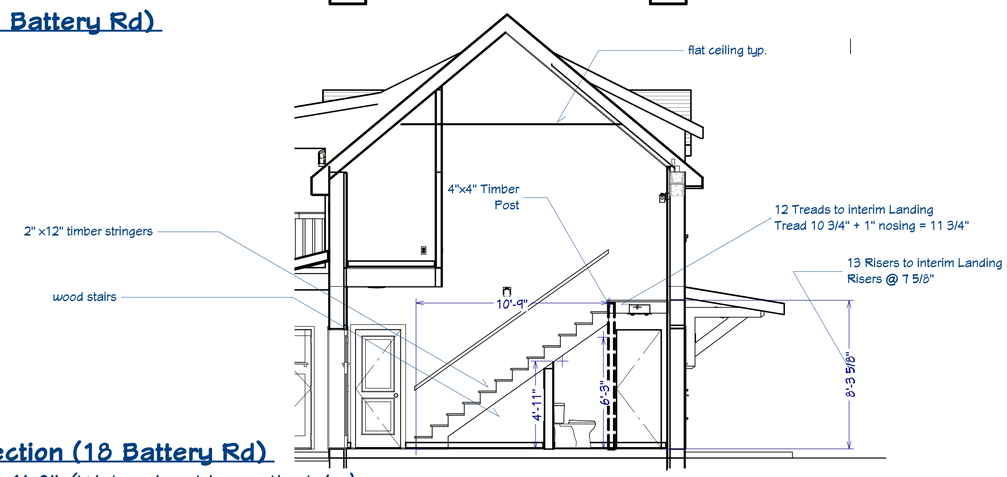

K Building Section (18 Battery Rd)
Scale: 1/4" = 1'-0" *(Water closet beneath stairs)*

REVISION TABLE			
NUMBER	DATE	REVISED BY	DESCRIPTION

Bermuda Housing Corporation

Phase II (Building 18)
Building Sections and Details

DRAWINGS PROVIDED BY:
Housing Development Services
Mitchell-Stevens

DATE: 5/22/2024

SCALE:

SHEET: A-23